SaltDogg by Buyers
9049 Tyler Blvd. • Mentor, Ohio 44060
Phone (440) 974-8888 • Fax (440) 974-0165
Toll-Free Fax 800-841-8003 • saltdogg.com

Instruction Manual

Direct Drive Under Tailgate Spreader 92425SSA

Table of Contents

Warranty Information 1
Spreader Installation Instructions 1,2
Spreader Installation Drawing 2
Spinner Assembly Instructions 3,4
Spinner Assembly Drawing 3,4
Hydraulics Installation 5
Operating Instructions 5,6
Recommended Maintenance 6
Parts list: Spreader Assembly 7
Spreader Parts Drawing 7
Parts List: Hardware Box 8
Hardware Bag Contents 8
Auger Replacement Kit 8
Spill Shields 8

UNDER TAILGATE SPREADER WARRANTY

This warranty replaces all previous warranties and no employee of this company is authorized to extend any additional warranties, or agreements, or implications not explicitly covered herein. Buyers Products Company warrants all parts of the product to be free from defects in material and workmanship for a period of (1) one year from the date of original installation. Parts must be properly installed and used under normal conditions. Normal wear is excluded.

Any part which has been altered, including modification, misuse, accident, or lack of maintenance will not be considered under this warranty. Hydraulic units are not to be disassembled without the express written permission from Buyers Products Company. The sole responsibility of Buyers Products Company under this warranty is limited to repairing or replacing any part(s) which are returned, prepaid, 30 days after such defect is discovered, and returned part(s) are found to be defective by Buyers Products Company.

Authorization from Buyers Products Company must be obtained before returning any part. The following information must accompany defective parts returned to Buyers Products Company: RMA#, spreader model, serial number, date installed, and distributor from whom it was purchased. Buyers Products Company shall not be liable for damage arising out of failure of any unit to operate properly, or failure, or delay in work, or for any consequential damages. No charges for transportation or labor performed on any part will be allowed under this warranty.

Installation Instructions

NOTE: The left and right end plates may, on occasion, get bent through improper handling during shipment or storage. If this should happen, square and true the left and right end plates before installation.

1. Aligning the spreader:

A. Position the spreader with the truck such that the auger drive is located on the right side of the truck (passenger side).

B. Lift the spreader up and under the dump body tailgate, positioning the spreader forward as close as possible to the dump body. The tailgate of the dump body should lay down horizontally over the spreader.

C. Support the spreader solidly and securely when positioning for mounting.

2. Attach mounting brackets (See hardware installation drawing on page 2)**:**

A. Attach a quick detach plate, (Item 1) to both sides of the spreader frame using hinge pins (Item 2) and a hairpin cotter pins (Item 5).

B. Position the (2) quick detach plates over the dump body rub rails and flush with rear edge of dump body.

C. Weld the (2) quick detach plates to the dump body rub rails. Weld the plates continuously around (3) sides of each plate. Do not weld along the edge of the plates next to the attachment pin.

—continued inside

Mounting Hardware Installation Drawing

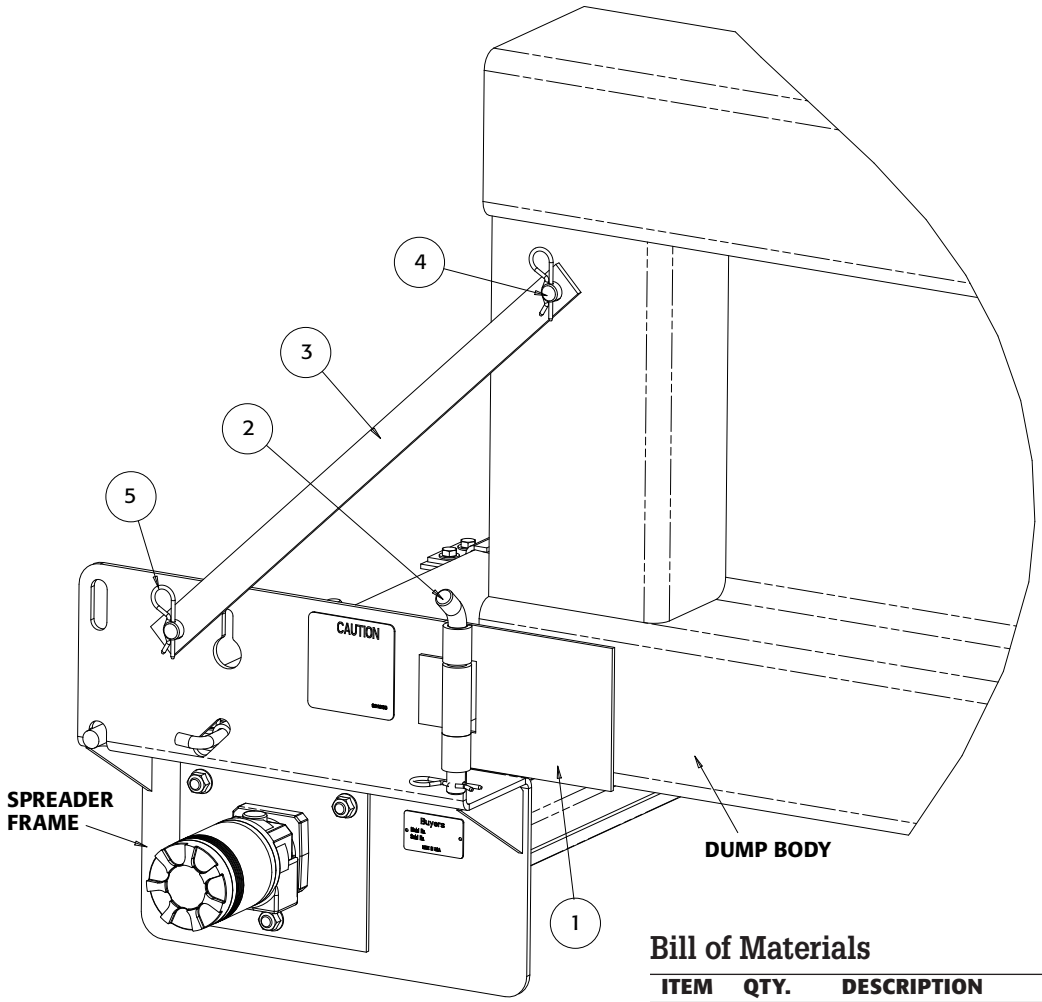

Bill of Materials

ITEM	QTY.	DESCRIPTION	PART NO.
1	2	Quick Detach Plate	**3009526**
2	2	Hinge Pin	**3011139**
3	2	Hanger Iron Brace	**3011137**
4	2	Pin Brace	**3000210**
5	6	Hair Pin Cotter 5/32"	—

D. Align the pin brace (Item 4) on the dump body using the iron brace (Item 3) for exact positioning. For proper fit, hanger iron brace may require some minor bending.

E. Weld the (2) pin braces (Item 4) to the dump body sides, all around.

F. Attach the iron braces (Item 3) to the pin braces on the sides of the dump body and the sides of the spreader using (2) hairpin cotter pins (Item 5).

G. If there is a gap between the spreader and the dump body, weld or bolt a steel strip to the forward edge of the spreader to cover the gap.

H. If you have purchased the tailgate side shields (924F0106SSPR), bolt or weld them to the inside of the tailgate to prevent material spillage at the ends of the spreader.

3. Spinner assembly installation: (See installation drawings on pages 3 and 4.)

A. Attach the spinner shield (Item 2) to the spinner frame (Item 1) using (2) 5/16-18 x 1-1/4 cap screws, 5/16 flat washers and (2) 5/16-18 hex flange nuts.

B. Attach the spinner disk sub assembly to the hydraulic motor on the spinner frame and tighten the set screw in the disk collar.

Note: Be sure to lubricate the hydraulic motor shaft generously with Never Seez lubricant before assembling.

C. Attach the spinner frame assembly to the lower tray of the spreader with the hinge rod and attach (2) hairpin cotter pins.

D. The leveling mechanism may now be mounted. Park truck on flat, level surface. With spinner assembly in level position, carefully measure "L" and "D" distances. Use any of 3 available holes in height adjustment bracket. Locate bar or spinner lug such that ½" hole will position with D1=D and L1=L. Modify angle if necessary.

E. Secure bar or spinner lug to the truck frame.

F. Attach parallel linkage rods to heights adjustment bracket and angle. Secure them using ½" washers and hair pins.

G. Clamp parallel linkage rods together. To verify leveling action, slowly raise the dump. Be sure that spinner motor assembly and linkages do not have any interference with truck body and it does not have contact with the road. After checking weld parallel linkage bars together.

H. Keeping the spinner assembly level, remove the set screw from the clamp collar and secure the spinner frame in place using the spinner assembly lock.

Parallel Linkage, Spinner Frame & Bar Installation Drawings

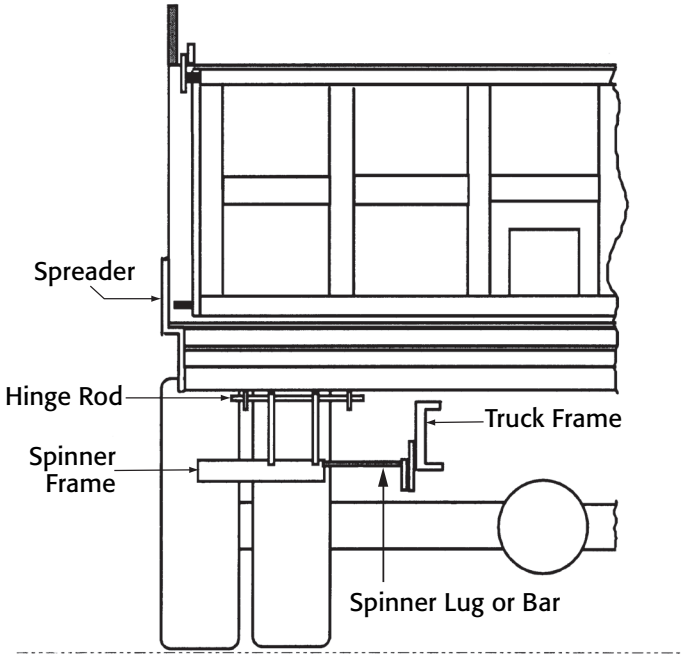

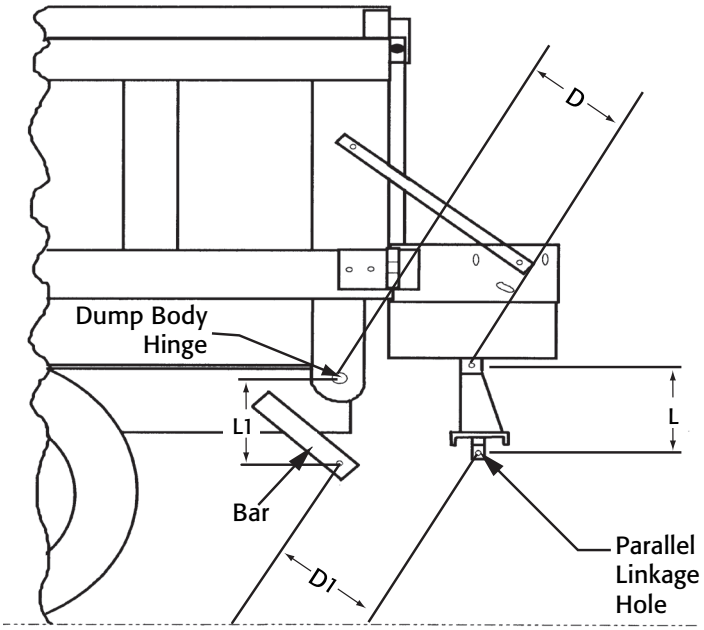

Parallel Linkage, Spinner Frame & Bar Installation Drawings (cont.)

Bill of Materials

ITEM	QTY.	DESCRIPTION	PART NO.
1	1	Spinner Frame Assy.	**3018416**
2	1	Spinner Shield	**3006659**
3	1	Spinner disk Assy.	**3001472A**
4	2	Linkage Rods, Welded	**924F0012**

ITEM	QTY.	DESCRIPTION	PART NO.
5	1	Hinge Rod	**3006646**
6	1	Spinner Lug	**3006645**
7	1	Bar	**924F0014**
8	1	Height Adjustment Bracket	**3017175**

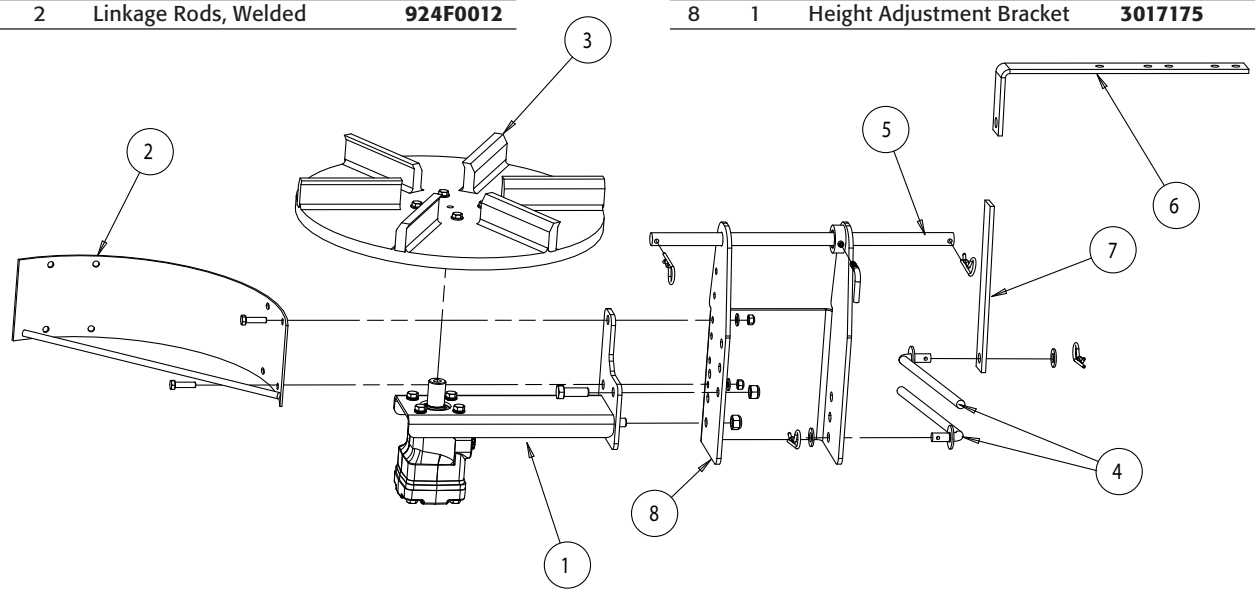

Using hose number 3008112, insert one end into the bottom of the ball valve assembly. Insert the other end into the LH port (when looking from rear) of the hydraulic motor.

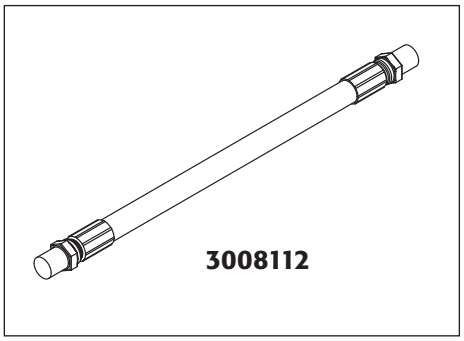

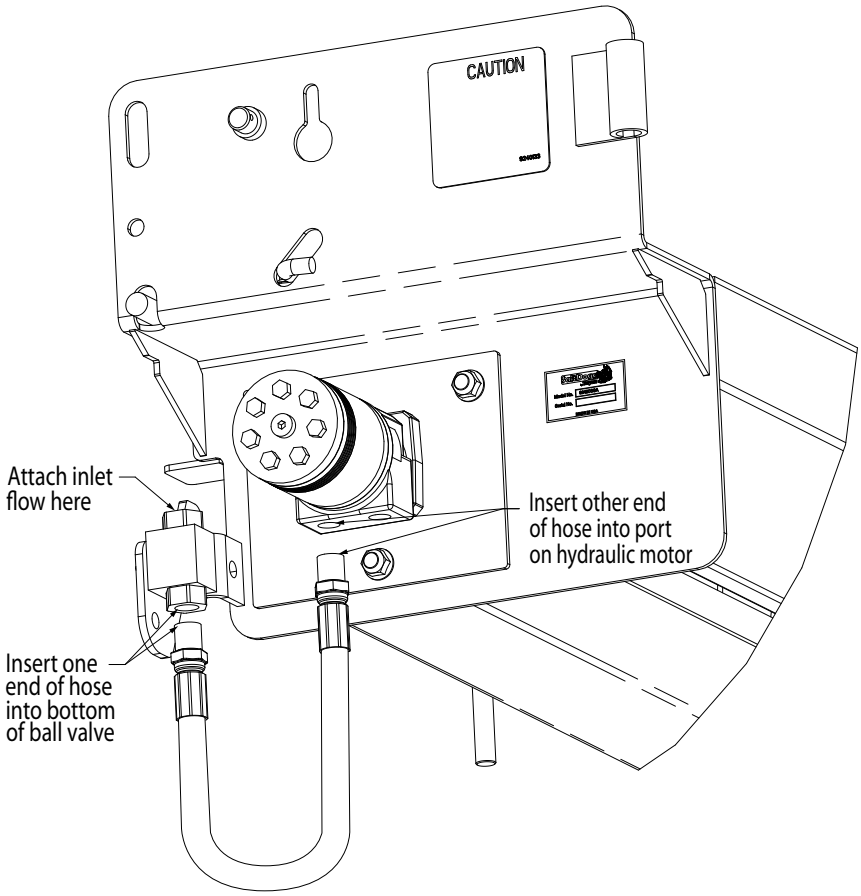

Hydraulic Installation Instructions

A. During assembly take precautions to keep all hydraulic components as clean as possible.

B. Allow enough hose length to prevent kinking and stretching of the hoses and to permit raising the dump body. Support long hoses with wire ties or clamps.

C. Protect hoses from wear caused by sliding and/or vibration.

D. For proper rotation of auger and spinner motors, hoses may be reversed.

Note: *Use of a pipe joint sealant compatible with hydraulic oil is recommended for all screw fittings.*

E. Use swivel type hose ends to connect hoses to flow valve. Damage to valve body may occur if the fittings in flow valve are over tightened

F. To achieve a positive shutoff of the auger motor, the inlet flow must pass through the ball valve (pre-mounted to the spreader) & the supplied hose must connect the ball valve to the auger's hydraulic motor as shown in the figures on the bottom of page 4. (Inspection of this hose is recommended to ensure no damage has occurred during shipping)

G. Buyers Products recommends a minimum flow rate of 9 GPM @ 1000 rpm to operate our spreaders.

Hydraulic Pump Diagram

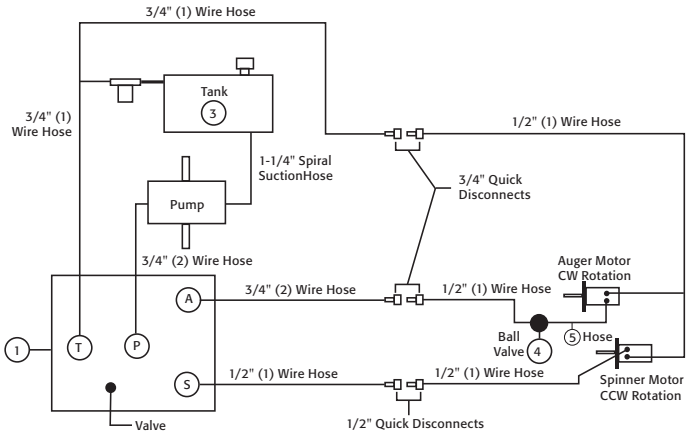

Bill of Materials

ITEM	PART NO.	QTY.	DESCRIPTION
1	**HV715**	1	Dual Flow Regulator Valve
2	**HVC1**	1	Dual Flow Regulator Console
3	**SMR15**	1	15 Gallon Reservoir
4	**3008523**	1	Ball Valve Assembly
5	**3008112**	1	Hose (Direct Drive)

Operating Instructions

⚠ CAUTION

A. Be sure everyone is standing clear.
B. Be alert for anything that may require shutting down the system.
C. Before working in or around spreader equipment, be sure all hydraulic controls are moved to off position.

1. Pre-start up.

A. Use high grade non foaming hydraulic oil to fill reservoir about 3/4 full.
B. Position valve on/off lever to off.
C. Move auger and spinner knobs on the valve to the open position.
D. Engage PTO and circulate hydraulic oil for several minutes to warm up.
E. Move valve on/off lever to on.
F. Inspect hydraulic system for leaks.
G. Check auger and spinner to see if they are working properly.
H. Refill reservoir to 3/4 full.
I. Hydraulic system should now be ready for use.

2. Initial use of spreader

A. Shut off spinner and auger knobs and position the on/off lever to on. Engage the PTO and allow the hydraulic system to warm up.
B. Open the cover plate and secure vertically with locking brackets.
C. Open dump body tailgate as wide as possible from bottom without bearing against cover plate. Set stop chains.
D. Position spinner assembly to the far left (drivers side), tighten clamp. Determine placement of material at various spinner and auger speeds by spreading a small amount of material (Far left position used to spread (3) three or (4) four lane highway from right lane).
E. Position spinner assembly to the far right (passenger side), tighten clamp. Determine placement of material at various spinner and auger speeds by spreading a small amount of material (Far right position used to spread (4) four lane highway from left lane).
F. Changing auger and spinner speeds on the valve and placing spinner at various positions from left to right will produce various spread patterns.

3. Using the Auger Lock-out System

A. Shut off spinner and auger and position the main hydraulics on/off lever to off.

B. Remove the lock-out pin, rotate the handle, and insert the pin through the holes in the handle and the bracket to prevent accidental engagement of the hydraulics. (see illustration below)

C. The lower tray may now be opened for servicing the auger.

D. After servicing, first close and lock the tray then reverse the steps to move the handle and pin back to their original positions. **BE SURE TO REINSERT THE LOCK-OUT PIN THROUGH THE HOLES IN THE HANDLE AND THE BRACKET.**

E. Turn the main hydraulics back on and the spreader is ready for operation.

⚠ CAUTION

Before working in or around the auger area, the valve control lever must be in the off position. Disengage PTO, shut off engine, and follow the auger lock-out instructions. MAKE SURE THE LOCK-OUT PIN IS ALWAYS USED IN BOTH THE ON AND OFF POSITIONS. After servicing is complete, reverse the process to restore the spreader function.

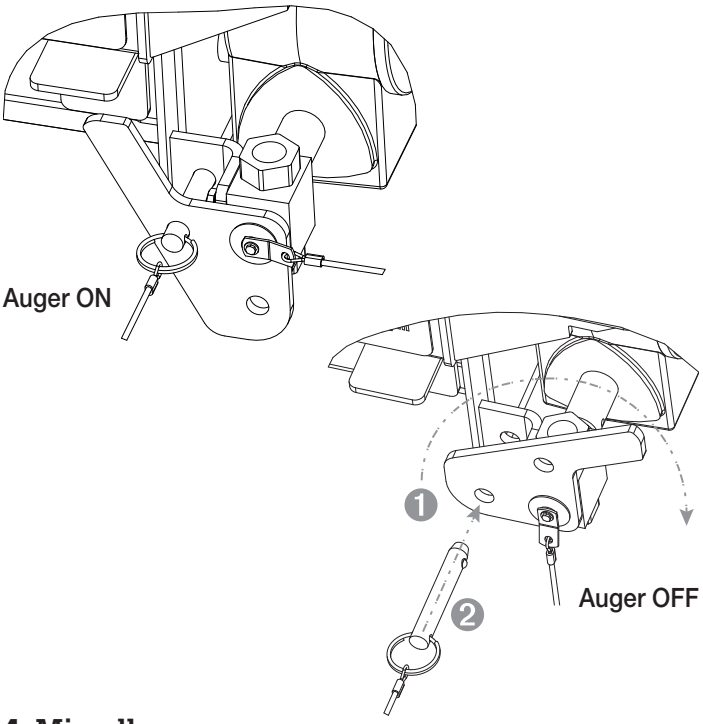

4. Miscellaneous

A. Valve setting changes may be made with truck in motion.

B. By moving on/off lever to the off position, spinner and auger may be stopped at the same time without changing their valve settings.

C. Close cover plate flat over spreader trough and lock in place for normal use of dump truck. Tailgate may be opened from top or bottom.

D. When truck is used for extensive hauling the spinner assembly should be removed.

E. If auger clogs, shut off spinner, open auger knob valve and increase the engine speed. With the engine at a higher speed, move the valve lever from the on to the off positions rapidly; repeat as needed. This action may unclog the auger. If this action fails to free the auger, manual unclogging will be required.

⚠ CAUTION

Position the valve on/off control lever in the off position when the spreader is not in use or is removed. In the event the valve on/off control lever is left in the on position, a heat problem may occur as the pump continues to pump oil to the hydraulic valve. This could cause a hose to burst spraying hot oil.

Recommended Maintenance

A. Warm up hydraulic system before using.

B. Keep the reservoir 3/4 full with high grade non-foaming hydraulic oil.

C. Use precautions to keep contaminants from getting in reservoir when filling.

D. Quick connects are a prime source of contamination.

1. Clean quick connects before connecting or disconnecting them.
2. Protect quick connects from contaminates at all times.

E. Lubricate all bearings with suitable type grease on a regular basis. More frequent lubrication is recommended during periods of heavy use.

F. Lubricate the spinner hinge rod periodically.

G. Maintain the proper lubrication level in all gearboxes with SAE 90 gear lubricant.

H. When not in use, keep the spreader tray empty to prevent freezing of material around auger in extremely cold weather.

I. To extend the life of your spreader:

1. Hose down and clean after each use.
2. Repaint and/or oil after each season.

Spreader Assembly Parts List

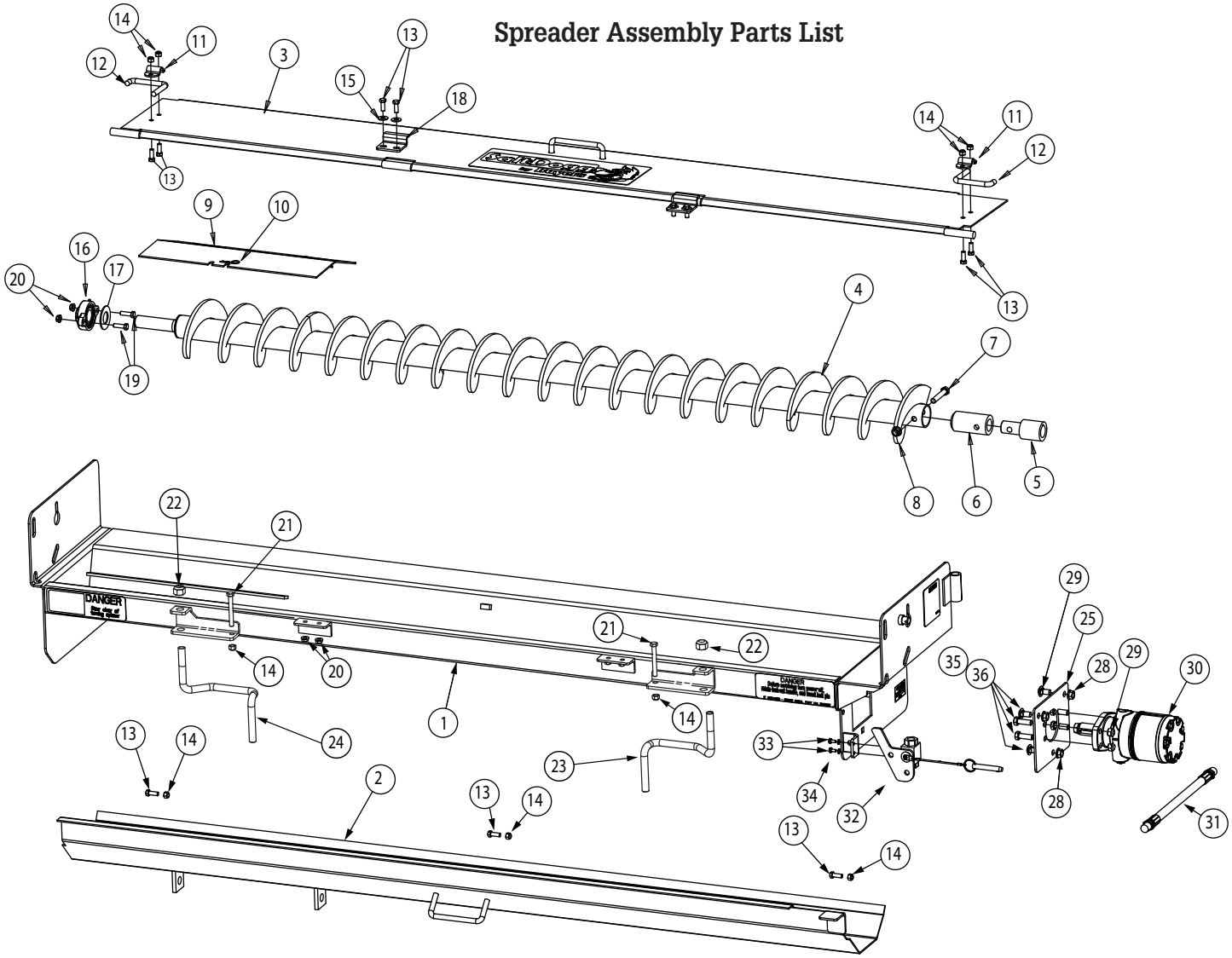

Bill of Materials

ITEM	QTY.	DESCRIPTION	PART NO.
1	1	Spreader frame	**3015396**
2	1	Formed lower tray	**3017489**
3	1	Top cover	**3012956**
4	1	Auger	**3017487**
5	1	Adaptor	**3017829**
6	1	Spacer sleeve	**9240083**
7	1	Bolt, 1/2" - 13 x 3"	—
8	1	Nut, hex flange, 1/2" - 13	—
9	1	Spinner cover plate	**3000270**
10	1	Hairpin cotter pin, 3/32"	—
11	2	Cover latch bracket	**3006968**
12	2	Locking handle	**3000268**
13	11	Capscrew, 3/8" - 16 x 1"	—
14	9	Nut, elastic stop, 3/8" - 16	—
15	4	Washer, flat, 3/8"	—
16	1	Bearing	**9240086**
17	1	Felt gasket	**9240087**
18	2	Latch, cover mounting	**3008447**

ITEM	QTY.	DESCRIPTION	PART NO.
19	2	Capscrew, 3/8" - 16 x 1-1/4"	—
20	6	Nut, serrated flange, 3/8" - 16	—
21	2	Capscrew, 3/8" - 16 x 3 1/2"	—
22	2	Nut, elastic stop, 5/8" -11	—
23	1	Cam handle passenger side	**3019033**
24	1	Cam handle driver side	**3019032**
25	1	Plate, motor mount	**3001367**
26	5	Capscrew, 1/2" - 13 x 1"	—
27	4	Washer, lock, 1/2"	—
28	3	Nut, serrated flange, 1/2" x 13	—
29	3	Carriage bolt, 1/2" - 13 x 1"	—
30	1	Hydraulic motor	**CM074P**
31	1	Hose, direct drive	**3008112**
32	1	Ball valve assembly	**3008523**
33	2	Capscrew, 1/4" - 20 x 1/2"	—
34	2	Washer, Lock, 1/4"	—
35	4	Capscrew, 3/8" - 16 x 1"	—
36	4	Washer, lock, 3/8"	

SaltDogg by Buyers
9049 Tyler Blvd. • Mentor, Ohio 44060
Phone (440) 974-8888 • Fax (440) 974-0165
Toll-Free Fax 800-841-8003 • saltdogg.com

Hardware Box Parts List

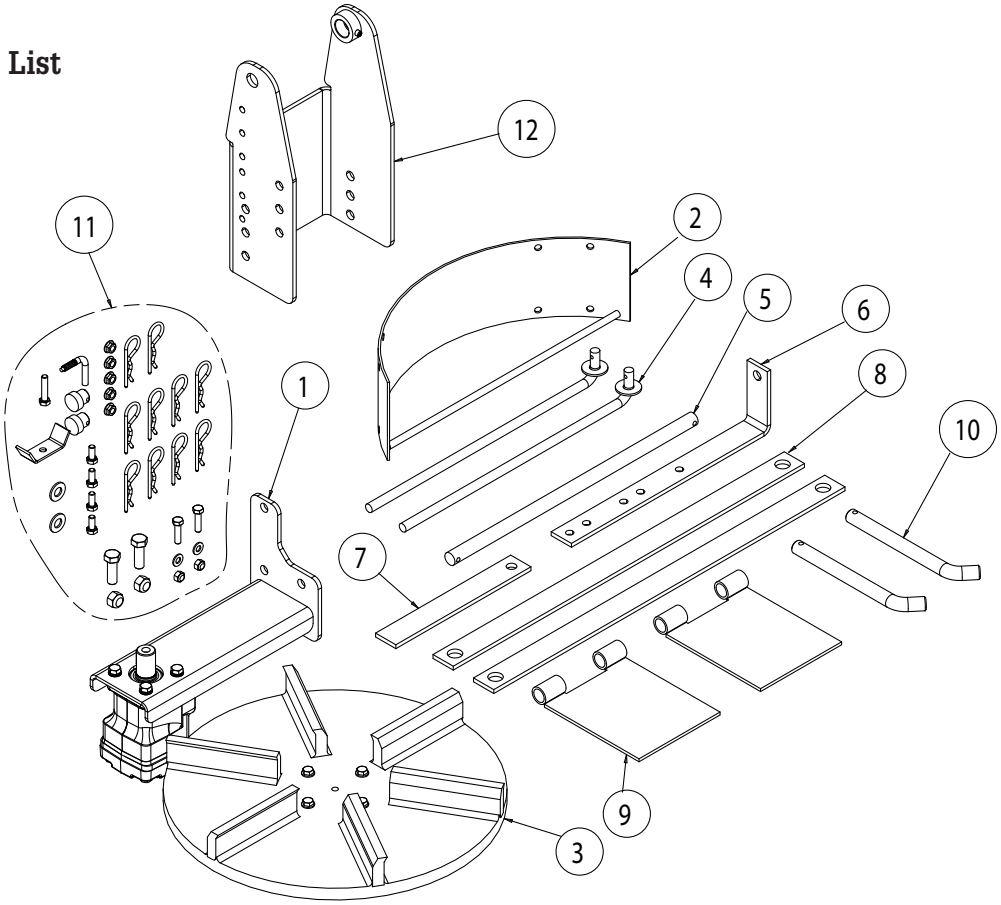

Bill of Materials

ITEM	QTY.	DESCRIPTION	PART NO.
1	1	Spinner Frame Assy.	**3018416**
2	1	Spinner Shield	**3006659**
3	1	Spinner disk Assy.	**3001472A**
4	2	Linkage Rods, Welded	**924F0012**
5	1	Hinge Rod	**3006646**
6	1	Spinner Lug	**3006645**
7	1	Bar	**924F0014**
8	2	Bar, Hanger Brace	**3011137**
9	2	Detatch Mounting Plate	**3009526**
10	2	Hinge Pin	**3011139**
11	1	Hardware Bag	**3017834**
12	1	Height Adjustment Bracket	**3017175**
-	1	Never Seez Compound	**9240119**

Auger Replacement Kit (3018227)

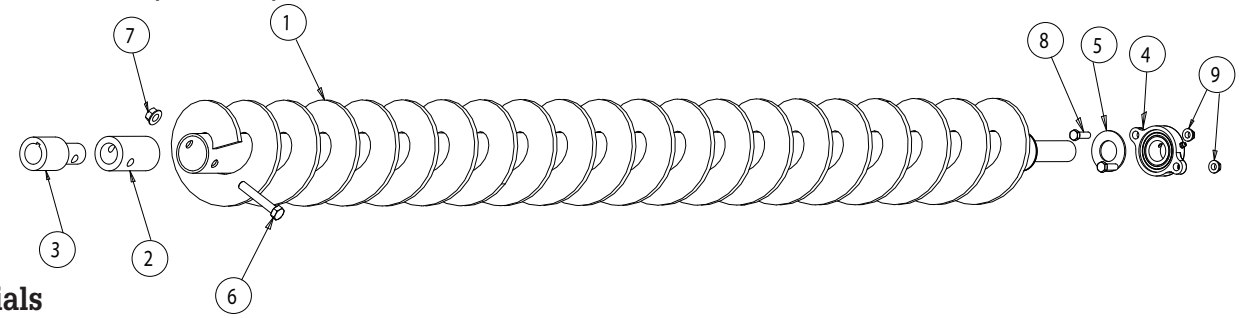

Bill of Materials

ITEM	QTY.	DESCRIPTION	PART NO.
1	1	Auger	**3017487**
2	1	Adaptor Sleeve	**9240083**
3	1	Adaptor Shaft	**3017829**
4	1	Bearing	**9240086**
5	1	Felt Gasket	**9240087**
6	1	Capscrew, 1/2"-13 x 3"	—
7	1	Locknut, Reversible Hex, 1/2" - 13	—
8	2	Capscrew, 3/8"-16 x 1 1/4"	—
9	2	Nut, Serratted Flange, 3/8"-16	—
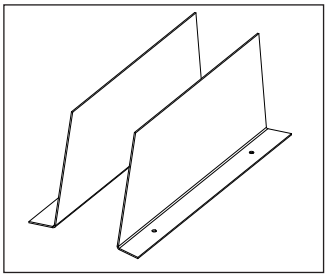
Spill Shields (924F0106SSPR)