Irritrol®

200B SERIES

VALVES

HEAVY-DUTY, CORROSION- AND UV-RESISTANT PVC CONSTRUCTION WITH STAINLESS STEEL SPRING AND HARDWARE
Provides consistent operation

SLOW-CLOSING DESIGN
Reduces water hammer and resulting stress on the system

RUGGED, DOUBLE-BEADED SANTOPRENE® DIAPHRAGM
Ensures a leak-proof seal

INTERNAL AND EXTERNAL BLEED (FLUSH MODE)
Allows for manual operation

ACCEPTS OMNIREG® MODULAR PRESSURE REGULATOR
Ensures consistent performance

HIGH-STRENGTH RIBBED BONNET AND BOTTOM INLET
Increases durability

UNIQUE THREE-WAY STAINLESS STEEL BONNET
Screws accept Phillips, flat-blade and hex-driver tools for easy servicing without removal from the system

The Irritrol® 200B Series globe/angle valves have built their popularity on a proven record of reliability and a reputation for offering valuable features at an affordable price. The 200B Series provides manual internal and external bleed, heavy-duty, UV-resistant PVC construction, stainless steel hardware, a double-beaded diaphragm and a captive solenoid plunger.

WARRANTY 5-YEAR WARRANTY

ELECTRIC GLOBE/ANGLE
1", 1½", AND 2" PLASTIC MODELS

IRRITROL.COM

ADDED FEATURES

- Flow control allows precise adjustment and manual shutoff
- Buna-N valve seat seal
- Unique threaded inlet plug O-ring seal prevents leaks
- Encapsulated injection-molded solenoid with a captive hex plunger
- Five-year warranty

OPERATING SPECIFICATIONS

- Flow range: 5-120 GPM
- Pressure range: 20-150 psi

ELECTRICAL SPECIFICATIONS

- Solenoid: 24 V ac
- Inrush volt-amp: 24 V ac-9.6 VA
- Inrush current: .4 amp
- Holding volt-amp: 24 V ac-4.8 VA
- Holding current: .2 amp

MODELS

Model	Description
214B	1″ NPT threads, flow control
216B	1½″ NPT threads, flow control
217B	2″ NPT threads, flow control

DIMENSIONS

- **214B:** H: 6 ½″, W: 2 ½″, L: 4 ½″
- **216B:** H: 7 ¾″, W: 4 ¼″, L: 5 ½″
- **217B:** H: 8 ¾″, W: 5 ⅜″, L: 6 ¼″

SPECIFYING INFORMATION

21 XB

MODEL	SIZE
21 - 200B Series electric valve	**4** - 1″ size **6** - 1½″ size **7** - 2″ size
Example: A 200B Series 1″ electric valve = **214B**	

OPTIONAL ACCESSORIES

A Recycled-water solenoid kit (RW60-KIT); purple solenoid with purple warning tag

B DC latching solenoid (DCL)
Note: *Maximum pressure for a valve that utilizes latching solenoid is 120 psi.*

C OmniReg® regulator (OMR-30)

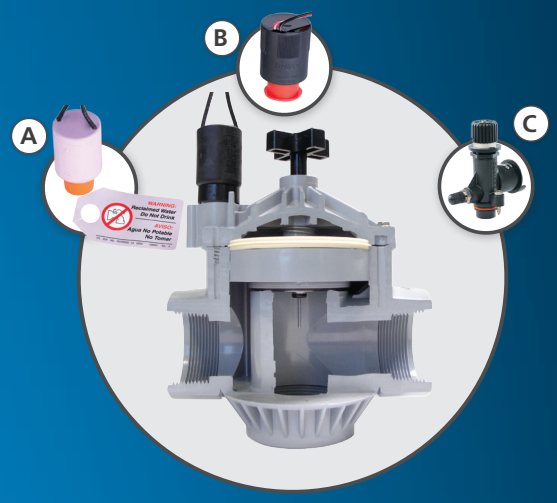

* *Optional accessories are field-installable. Must specify separately if required.*

PRESSURE LOSS DATA

Flow Rate - GPM

MODEL	SIZE	GLOBE ANGLE	5	10	15	20	30	40	50	60	80	100	120
214B	1″	G	3.36	2.60	1.82	2.35	5.40						
		A	3.09	2.20	1.48	1.98	4.00						
216B	1 1/2″	G				3.04	2.66	2.33	2.97	4.14	5.62		
		A				2.76	2.24	1.99	2.30	3.10	4.42		
217B	2″	G				2.00	1.93	1.73	1.55	1.68	2.99	4.85	6.31
		A				2.00	1.93	1.73	1.55	1.59	2.15	3.27	4.88

Pressure loss data are derived from valves independently tested by CIT, Fresno, CA.

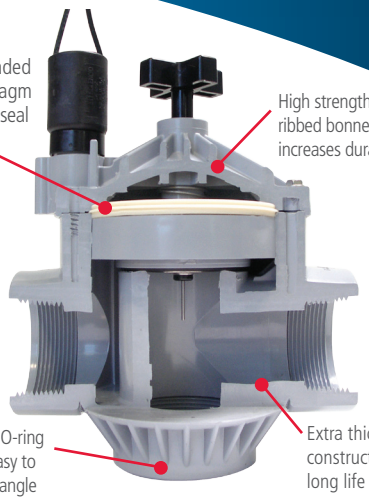

We reserve the right to improve our products and make changes in the specifications and designs without notice and without incurring obligation. Products depicted in this brochure are for demonstration purposes only. Actual products offered for sale may vary in design and features.

5825 Jasmine Street, Riverside, CA 92504-1183 • Tel 800-634-TURF (8873) • Fax 800-862-8676

© Irritrol 6/17 **Form No 16-TL1607**

Irritrol®