The Vu-Flow Filter Difference

DEFINED BY DURABILITY

For nearly 40 years Vu-Flow™ sediment filters have earned the reputation of being the most durable sediment filter of choice. From the very beginning Vu-Flow™ filters were designed to be an easy-to-maintain sediment filter.

SCREEN FILTER® TECHNOLOGY

Water travels through the top of a Screen Filter and spins in a centrifugal motion causing the dirt and debris to be pushed to the outside of the housing, settling at the bottom.

NO NEED TO REPLACE FILTERS

Vu-Flow™'s polyester and stainless steel screens are removable so if the flush doesn't clean the filter completely it can easily be removed from the housing, cleaned and reinstalled in minutes. Saving time and money on costly replacement filters.

CONVENIENT COVER DESIGN

Our covers are designed with a durable thermoplastic construction with high chemical and heat resistance and are clear to provide visibility of debris buildup.

WHAT MAKES A VU-FLOW™ FILTER?

Filter Body

Vu-Flow™ Screen Filter™ Sediment Filter bodies are PVC material in 3/4" FPT, 1", 1-1/2" and 2" slip by slip connections in and out. Bushings are available to convert 1", 1-1/2" and 2" slip by slip connections to female pipe thread.

Filter Element

Polyester and stainless steel element screens are available in many mesh sizes to meet your requirements.

Durable Cover

Vu-Flow™ Sediment Filter covers are made of high impact polymer resin for maximum strength and durability.

ELEMENT SCREEN SIZES

Mesh	Microns	Opening
24	711	.028"
30	533	.021"
40	381	.015"
60	254	.010"
100	152	.006"
140	104	.004"
250	61	.0024"
500	30	.0012"
1000	15	.0006"

30, 60, 100, 140 & 200 mesh sizes also available in stainless steel

Screen Filters

SCREEN FILTER SIZES

Body Size	3/4"	1"	1.5"	2"
Filter Length	11-3/8"	11-3/8"	15-3/8"	17-7/8"
Filter Width	5"	5"	5-1/4"	5-1/2"

- Sediment is visible through the clear cover indicating when the filter needs cleaning.
- Sediment is quickly and easily removed by opening the ball valve at the bottom of the filter cover.
- Clear cover is easily removed for total cleaning–no tools required.*
- Reusable polyester and stainless steel element screens in many mesh sizes from very fine to very coarse.
- No down time.

**Using tools voids warranty.*

Sand Separator™ Filters

SAND SEPARATOR™ FILTER SIZES

Body Size	3/4"	1"	1.5"	2"
Filter Length	14-3/8"	14-3/8"	15-3/8"	17-7/8"
Filter Width	5"	5"	5-1/4"	5-1/2"

The Sand Separator™ Filter brings all the advantages of our standard Screen Filter, but the unique design of the Sand Separator™ element allows debris to settle in the bottom of the clear cover, trapping sediment away from the screen. The new 1-1/2” and 2” model elements make it easy to convert a standard Screen Filter to a Sand Separator™ by simply replacing the element. Sand Separator™ elements are available with either polyester or stainless steel screens to suit your needs.

Fresh Water Filters

Our highly flexible filters are designed to be utilized in a wide variety of potable water filtering applications. Whether your water source is a well, lake or municipal supply, Vu-Flow™ Sediment Filters will do the heavy lifting, keeping sediment from causing damage in your home.

- Sediment is visible through the clear cover indicating when the filter needs cleaning.
- Sediment is quickly and easily removed by opening the ball valve at the bottom of the filter cover.
- Clear cover is easily removed for total cleaning–no tools required.*
- Reusable polyester and stainless steel element screens in many mesh sizes from very fine to very coarse.
- Flow capacity for entire system.
- No down time.

**Using tools voids warranty.*

APPLICATIONS INCLUDE:

IRRIGATION SYSTEMS | **LIVESTOCK FEEDING** | **AGRICULTURE**

YOUR LIVESTOCK FEEDER SYSTEM WITH VU-FLOW™

The Vu-Flow™ Screen Filter or Sand Separator™ filter will be an integral part of your livestock feeder system.

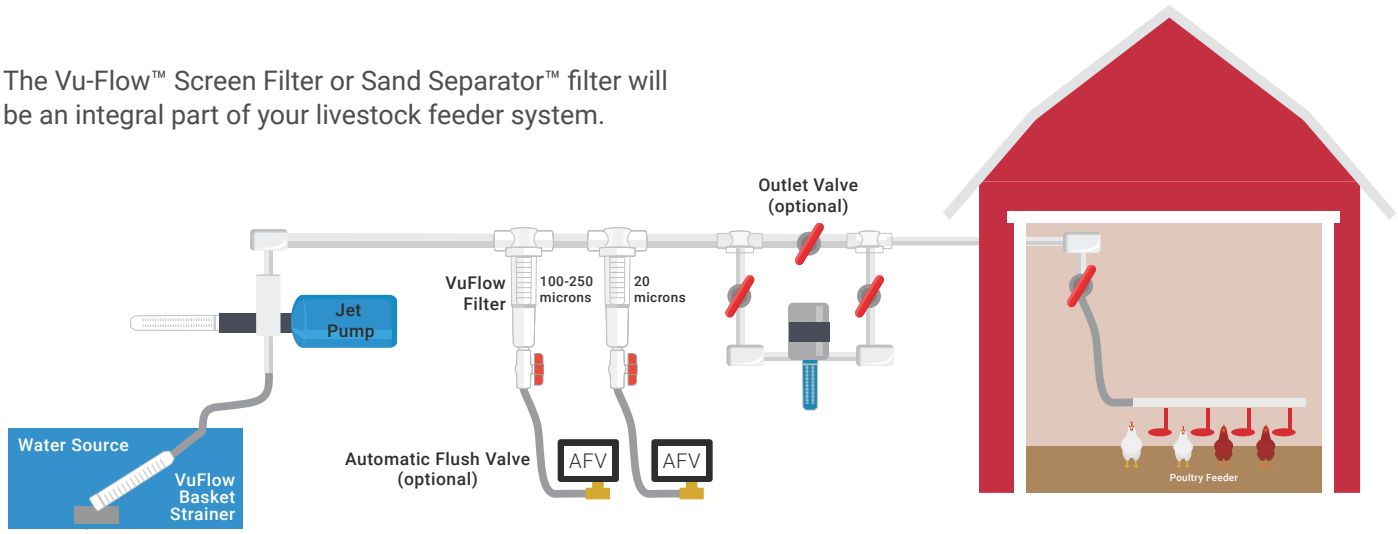

T-STYLE

	2" Screen Filter	1.5" Screen Filter	1" Screen Filter	3/4" Screen Filter
FLOW RATE	18-100 GPM	10-50 GPM	1-25 GPM	1-25 GPM
SIZE	17 7/8" L X 5 1/2" W	15 3/8" L X 5 1/4" W	11-3/8" L X 5" W	11-3/8" L X 5" W
SLIP SIZE	2" SLIP	1.5" SLIP	1" SLIP	3/4" FPT
	2" Sand Separator™	1.5" Sand Separator™	1" Sand Separator™	3/4" Sand Separator™
FLOW RATE	18-100 GPM	10-50 GPM	1-25 GPM	1-25 GPM
SIZE	17 7/8" L X 5 1/2" W	15 3/8" L X 5 1/4" W	14 3/8" L X 5" W	14 3/8" L X 5" W
SLIP SIZE	2" SLIP	1.5" SLIP	1" SLIP	3/4" FPT

COMBO STYLE CF

	2" Screen Filter	1.5" Screen Filter	2" Sand Separator™	1.5" Sand Separator™
FLOW RATE	18-100 GPM	10-50 GPM	18-100 GPM	10-50 GPM
SIZE	18 7/8" L X 5 1/2" W	16 5/8" L X 5 1/4" W	18 7/8" L X 5 1/2" W	16 5/8" L X 5 1/4" W
SLIP SIZE	2" SLIP	1.5" SLIP	2" SLIP	1.5" SLIP

L-STYLE L

	2" Screen Filter	1.5" Screen Filter	2" Sand Separator™	1.5" Sand Separator™
FLOW RATE	0-100 GPM	0-50 GPM	35-90 GPM	5-20 GPM(LP) 15-40GPM (HP)
SIZE	18" L X 5 1/2" W	14 7/8" L X 4 1/2" W	18" L X 5 1/2" W	14 7/8" L X 4 1/2" W
SLIP SIZE	2" SLIP	1.5" SLIP	2" SLIP	1.5" SLIP

Fresh Water Filters

SCREEN | POLYESTER

Part No.
NT 75-24 P
NT 75-30 P
NT 75-40 P
NT 75-60 P
NT 75-100 P
NT 75-140 P
NT 75-250 P
NT 75-500 P
NT 75-1000 P
NT 100-24 P
NT 100-30 P
NT 100-40 P
NT 100-60 P
NT 100-100 P
NT 100-140 P

Part No.
NT 100-250 P
NT 100-500 P
NT 100-1000 P
NT 150-24 P
NT 150-30 P
NT 150-40 P
NT 150-60 P
NT 150-100 P
NT 150-140 P
NT 150-250 P
NT 150-500 P
NT 150-1000 P
NT 200-24 P
NT 200-30 P
NT 200-40 P

Part No.
NT 200-60 P
NT 200-100 P
NT 200-140 P
NT 200-250 P
NT 200-500 P
NT 200-1000 P
CF 150-24 P
CF 150-30 P
CF 150-40 P
CF 150-60 P
CF 150-100 P
CF 150-140 P
CF 150-250 P
CF 150-500 P
CF 150-1000 P

Part No.
CF 200-24 P
CF 200-30 P
CF 200-40 P
CF 200-60 P
CF 200-100 P
CF 200-140 P
CF 200-250 P
CF 200-500 P
CF 200-1000 P
L 150-24
L 150-30
L 150-40
L 150-60
L 150-100
L 150-140

Part No.
L 150-250
L 150-500
L 150-1000
L 200-24
L 200-30
L 200-40
L 200-60
L 200-100
L 200-140
L 200-250
L 200-500
L 200-1000

SCREEN | STAINLESS STEEL

Part No.
NT 75-30SS P
NT 75-60SS P
NT 75-100SS P
NT 75-140SS P
NT 75-200SS P
NT 100-30SS P
NT 100-60SS P
NT 100-100SS P

Part No.
NT 100-140SS P
NT 100-200SS P
NT 150-30SS P
NT 150-60SS P
NT 150-100SS P
NT 150-140SS P
NT 150-200SS P
NT 200-30SS P

Part No.
NT 200-60SS P
NT 200-100SS P
NT 200-140SS P
NT 200-200SS P
CF 150-30SS P
CF 150-60SS P
CF 150-100SS P
CF 150-140SS P

Part No.
CF 150-200SS P
CF 200-30SS P
CF 200-60SS P
CF 200-100SS P
CF 200-140SS P
CF 200-200SS P
L 150-30SS
L 150-60SS

Part No.
L 150-100SS
L 150-140SS
L 150-200SS
L 200-30SS
L 200-60SS
L 200-100SS
L 200-140SS
L 200-200SS

SCREEN | CARBON

Part No.
NT 75-10AC P
NT 100-10AC P
NT 150-10AC P
NT 200-10AC P
CF 150-10AC P
CF 200-10AC P

SCREEN | PLEATED

Part No.
NT 75-25PLT P
NT 100-25PLT P
NT 150-25PLT P
NT 200-25PLT P
CF 150-25PLT P
CF 200-25PLT P

SCREEN | MELTBLOWN

Part No.
NT 75-5MB P
NT 100-5MB P
NT 150-5MB P
NT 200-5MB P
CF 150-5MB P
CF 200-5MB P

SAND SEPARATOR™ | POLYESTER

Part No.
75 SO 24 P
75 SO 30 P
75 SO 40 P
75 SO 60 P
75 SO 100 P
75 SO 140 P
75 SO 250 P
75 SO 500 P
75 SO 1000 P
NT 1 SO 24 P
NT 1 SO 30 P
NT 1 SO 40 P
NT 1 SO 60 P
NT 1 SO 100 P
NT 1 SO 140 P

Part No.
NT 1 SO 250 P
NT 1 SO 500 P
NT 1 SO 1000 P
NT 1.5 SO 24 P
NT 1.5 SO 30 P
NT 1.5 SO 40 P
NT 1.5 SO 60 P
NT 1.5 SO 100 P
NT 1.5 SO 140 P
NT 1.5 SO 250 P
NT 1.5 SO 500 P
NT 1.5 SO 1000 P
NT 2 SO 24 P
NT 2 SO 30 P
NT 2 SO 40 P

Part No.
NT 2 SO 60 P
NT 2 SO 100 P
NT 2 SO 140 P
NT 2 SO 250 P
NT 2 SO 500 P
NT 2 SO 1000 P
CF 1.5 SO 24 P
CF 1.5 SO 30 P
CF 1.5 SO 40 P
CF 1.5 SO 60 P
CF 1.5 SO 100 P
CF 1.5 SO 140 P
CF 1.5 SO 250 P
CF 1.5 SO 500 P
CF 1.5 SO 1000 P

Part No.
CF 2 SO 24 P
CF 2 SO 30 P
CF 2 SO 40 P
CF 2 SO 60 P
CF 2 SO 100 P
CF 2 SO 140 P
CF 2 SO 250 P
CF 2 SO 500 P
CF 2 SO 1000 P
L 1.5 SO 24 P
L 1.5 SO 30 P
L 1.5 SO 40 P
L 1.5 SO 60 P
L 1.5 SO 100 P
L 1.5 SO 140 P

Part No.
L 1.5 SO 250 P
L 1.5 SO 500 P
L 1.5 SO 1000 P
L 2 SO 24 P
L 2 SO 30 P
L 2 SO 40 P
L 2 SO 60 P
L 2 SO 100 P
L 2 SO 140 P
L 2 SO 250 P
L 2 SO 500 P
L 2 SO 1000 P

SAND SEPARATOR™ | STAINLESS STEEL

Part No.
75 SO 30SS P
75 SO 60SS P
75 SO 100SS P
75 SO 140SS P
75 SO 200SS P
NT 1 SO 30SS P
NT 1 SO 60SS P
NT 1 SO 100SS P

Part No.
NT 1 SO 140SS P
NT 1 SO 200SS P
NT 1.5 SO 30SS P
NT 1.5 SO 60SS P
NT 1.5 SO 100SS P
NT 1.5 SO 140SS P
NT 1.5 SO 200SS P
NT 2 SO 30SS P

Part No.
NT 2 SO 60SS P
NT 2 SO 100SS P
NT 2 SO 140SS P
NT 2 SO 200SS P
CF 1.5 SO 30SS P
CF 1.5 SO 60SS P
CF 1.5 SO 100SS P
CF 1.5 SO 140SS P

Part No.
CF 1.5 SO 200SS P
CF 2 SO 30SS P
CF 2 SO 60SS P
CF 2 SO 100SS P
CF 2 SO 140SS P
CF 2 SO 200SS P
L 1.5 SO 30SS P
L 1.5 SO 60SS P

Part No.
L 1.5 SO 100SS P
L 1.5 SO 140SS P
L 1.5 SO 200SS P
L 2 SO 30SS P
L 2 SO 60SS P
L 2 SO 100SS P
L 2 SO 140SS P
L 2 SO 200SS P

SAND SEPARATOR™ CARBON

Part No.
75 SO 10AC P
NT 1 SO 10AC P

SAND SEPARATOR™ PLEATED

Part No.
75 SO 25PLT P
NT 1 SO 25PLT P

SAND SEPARATOR™ MELTBLOWN

Part No.
75 SO 5MB P
NT 1 SO 5MB P